# JADAVPUR UNIVERSITY SALT LAKE CAMPUS
## Power Engineering Department

**ENQ NO: JU/SL/PE/T-09/19-20**
*(To be Quoted in all correspondences)*

TELEPHONE NO: 2335-5813
Fax No.: 2335-7254

JADAVPUR UNIVERSITY
KOLKATA – 700098

DATE: **06-02-2020**

### TENDERING

I shall be pleased to receive your lowest possible quotation in a SEALED COVER with our ENQUIRY NUMBER and the DUE DATE duly super scribed on the COVER and on the face of the offer letter for the supply of the under mentioned goods or articles, subjects to the TERMS AND CONDITIONS outlined below:

Last date for submission of quotation is **17-02-2020** (within 04:00 p.m) at **Power Engg Department Office, JU Salt Lake Campus.**

| Sl. No. | PARTICULARS | BRAND/ MAKE | APPROXIMATE QUANTITY |
|---|---|---|---|
| 01. | **Instrument Table- solid sal wood** as per specification attached in Annex-A | | **4 Nos** |

*Note:
A. Validity of your offer will be 45 days.
B. Warranty must be mentioned in your offer on the above items.
C. **Quotation shall be accepted only from GST registered vendor / dealer / manufactures etc. The GST registration number shall be mentioned on the quotation.**
D. Party may be requested to keep in touch with **Prof. K. K. Mandal, Dept. of Power Engg.** before quoting the rate for better knowledge of specification & quality of material.

**Yours faithfully**

Head
Dept. of Power Engg.
Jadavpur University
Salt Lake 2nd Campus
Kolkata-700 098

**Head of the Department**

**Terms &conditions Of Tender**

1. Quotation should be for free Delivery at Jadavpur University, Salt Lake campus unless otherwise arranged.
2. Price quoted should be net and minimum period of validity of the quotation SHOULD BE FOR 45 DAYS from the closing date.
3. Quotations should be free from CORRECTIONS and ERASURES
4. Sample must be attached with quotation in all possible cases.
5. Manufacturer's Name and the Country of ORIGIN of the materials offered must be clearly specified falling which the Tender will not be considered.
6. Samples must be submitted where specified so as to reach this office before the DUE DATE of Enquiry. Samples must be labelled clearly with our ENQUIRY NUMBER, DUE DATE, NAME OF FIRM and number on sample must correspond to the items in the tender.
7. The tenders will not be entitled to ask for any further information other than whether their tenders have been received or not.
8. The University does not bind itself to accept the lowest or any tender or assign any reason for non acceptance. It further reserves the right to accept any tender in part or in whole at its option.
9. If the University finds that the materials supplied are not of the contract quality or not according to the specification required by the University or otherwise not satisfactory owing to any reason, of which University shall be the sole judge, the University shall be entitled to refuse the acceptance of the said materials, cancel the order and buy its requirement elsewhere at supplier's responsibility.
10. Tenders must as far as possible, arrange to supply the materials according to the terms of delivery specified in the orders. If, however this is not possible, they shall clearly specify the time in which the delivery of the articles can be effected. This delivery time must be strictly adhered to. failure to supply within the specified time will lead to cancellation of the order without notice.
11. If the deliveries are not regular and if on that account the University is forced to buy the materials elsewhere, any loss or damage that the University may sustain thereby will be recovered from the supplier for non delivery at the scheduled periods.
12. THREE consecutive failures to supply within the scheduled time or times will entail removal of the Tenderer's name from the Approved list of suppliers.
13. **If any tenderer proposes to change GST & Delivery charges, in addition to his quoted rates this fact should be stated specifically in his quotation. In the absence of such statement the rate quoted will be deemed to be inclusive of GST & Delivery Charges.**
14. Non Compliance of an order may lead to cancellation of estimate and no enquiry will be issued in future. Up to 10% of bill value may be deducted for default on delivery.
15. IN ALL CASES OF DISPUTES, THE DECISION OF THE UNIVERSITY SHALL BE FINAL & BINDING ON YOU.

**By Order**

Annex-A

**Table Drawing for Electrical Lab :**

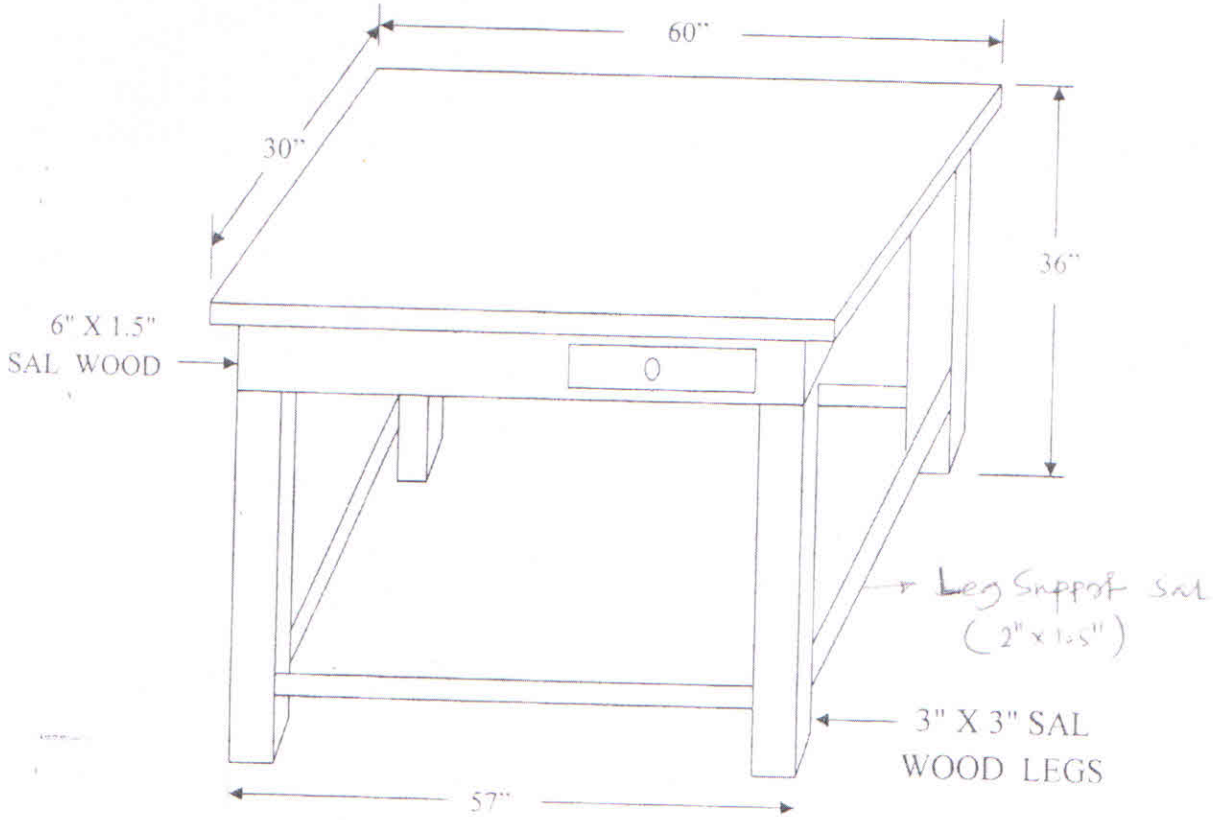


1" SAL WOOD TOP with total GALA POLISH finish
Drawer with GODREJ Lock

**Total : 4 tables.**

6/2/2020

Head
Dept. of Power Engg.
Jadavpur University
Salt Lake 2nd Campus
Kolkata-700 098